INNOVATIVE
CLOSET DESIGNS
445 West Main Street, Suite 7
Wyckoff, NJ 07481
201-848-6355 / 201-322-3721 Fax
customerservice@icdnj.com www.icdnj.com

Estimate

Date	Estimate #
11/20/2025	24551

All material is guaranteed to be as specified. All work to be completed in a workmanlike manner according to standard practices. All agreements contingent upon strikes, accidents or delays beyond our control. Owner to carry fire, tornado and other necessary insurance. Our workers are fully covered by Workman's Compensation Insurance.

Authorized Signature William B. Smith III

Name / Address

Montana Contracting
173 N Route 9W 845-664-2375 Ines
Congers, NY 10920 ines@montanacontracting
845-398-1778 O 201-290-0253 Kyle
Kyle@montanacontracting.com

Note: Pricing Is Valid for 30 Days From Date Of Estimate.

Existing Closet Material Must Be Removed Prior To Installation.

Please review all the information on this estimate. NON Returnable/NON Refundable Once Ordered. Lead-time on most orders as listed below from FINAL FIELD measurements - followed by signature and deposit if applicable.

5. M

TERMS	SALESPERSON	PROJECT	TAX STATUS
Net 30 Days	Don	SparkCarWash/UnionAve/L.4/L.5/Newburgh/NY	ST124

ITEM	DESCRIPTION	QTY/SF/LF...	PRICE	TOTAL
	Spark Car Wash Union Avenue Lots 4 & 5 Newburgh, NY 12553 Specs Taken From Pans - ALL BLOCK 11/19/2025			
	Bath Accessories - Confirm Locations			
Bobrick	Bobrick Stainless Steel Surface Mounted Multi Roll Toilet Tissue Dispenser B-2888	1	182.70	182.70T
Bobrick	Bobrick Tilt Mirror with Stainless Steel Frame 24" W x 36" H B-293-2436	1	825.43	825.43T
Bobrick	Bobrick Wall Mounted Clothes Hook with Bumper B-212	1	40.84	40.84T
Bobrick	Bobrick Classic Series Stainless Steel Surface Mounted Soap Dispenser B-2111	1	115.35	115.35T
	Grab Bars - Confirm Locations			
Bobrick	Bobrick 18" Grab Bar - 1 1/2" OD Satin Stainless Steel with Snap Flange B-6806-18	1	114.96	114.96T
Bobrick	Bobrick 36" Grab Bar - 1 1/2" OD Satin Stainless Steel with Snap Flange B-6806-36	1	131.69	131.69T
Bobrick	Bobrick 42" Grab Bar - 1 1/2" OD Satin Stainless Steel with Snap Flange B-6806-42	1	136.07	136.07T
	Lockers			
Lockers	(1) 6 Tier Competitor Locker 12 X 12 X 78, Closed Base, Flat Top, Powder Coated Finish Assembly Included. Locks: None quoted / Color: Not Selected / Diamond Perforated Ventilation / Single Point Latching NO Fillers Included per Quantities Provided (2) Exposed End Panels Included per Quantities Provided	1	1,420.00	1,420.00T

TOTAL

By providing credit card information, the 50% deposit charge and final balance charge following installation are authorized. Prepay terms are paid in full.

DATE:_____ SIGNATURE:_____

☐☐☐☐ - ☐☐☐☐ - ☐☐☐☐ - ☐☐☐☐

Exp. Date ____/____ CVV ____

Address credit card bill is mailed to: _____
_____

INNOVATIVE
CLOSET DESIGNS
445 West Main Street, Suite 7
Wyckoff, NJ 07481
201-848-6355 / 201-322-3721 Fax
customerservice@icdnj.com www.icdnj.com

Estimate

Date	Estimate #
11/20/2025	24551

All material is guaranteed to be as specified. All work to be completed in a workmanlike manner according to standard practices. All agreements contingent upon strikes, accidents or delays beyond our control. Owner to carry fire, tornado and other necessary insurance. Our workers are fully covered by Workman's Compensation Insurance.

Authorized Signature William B. Smith III

Name / Address

Montana Contracting
173 N Route 9W 845-664-2375 Ines
Congers, NY 10920 ines@montanacontracting
845-398-1778 O 201-290-0253 Kyle
Kyle@montanacontracting.com

Note: Pricing Is Valid for 30 Days From Date Of Estimate.

Existing Closet Material Must Be Removed Prior To Installation.

Please review all the information on this estimate. NON Returnable/NON Refundable Once Ordered. Lead-time on most orders as listed below from FINAL FIELD measurements - followed by signature and deposit if applicable.

5. M

TERMS	SALESPERSON	PROJECT	TAX STATUS
Net 30 Days	Don	SparkCarWash/UnionAve/L.4/L.5/Newburgh/NY	ST124

ITEM	DESCRIPTION	QTY/SF/LF...	PRICE	TOTAL
DDisclaimer...	*NOTE: 2-4 week lead time for quick ship colors, lead time to be confirmed with any other color selection.		0.00	0.00T
	Shelving Server Room Shelves			
PricingForL...	18" & 24" Deep Laminate Shelving - White / Grommets - Installed			421.84T
All	ALL PRICES ARE SUBJECT TO FINAL FIELD MEASUREMENTS.			0.00
Bldr/Home...	NOTE: If this estimate is going to a builder except the homeowner is signing off and/or paying ICD directly - the estimate must then be revised into the homeowner's name with the new payment terms of 50% deposit/balance COD.		0.00	0.00T
Gr	NOTE: I.C.D. WILL INSTALL GRAB BARS - IF NO WOOD BLOCKING A.K.A. "CATS" ARE INSTALLED IN PROPER LOCATIONS. ICD WILL USE ANCHORS TO INSTALL. CONFIRM ALL LOCATIONS WITH HOMEOWNER/BUILDER/SUPER		0.00	0.00T
Custom	CUSTOM ORDER - 3 - 4 Week Lead Time from Final Measurements - NON Returnable / NON Refundable - No cancellations and/or changes once order has been processed.		0.00	0.00T
Custom	LOCKERS CUSTOM ORDER - 2-4 Week Lead Time for Quick Ship Colors, Lead Time to be Confirmed with Any Other Color Selection. - NON Returnable / NON Refundable - No cancellations and/or changes once order has been processed.		0.00	0.00T
Custom La...	LAMINATE CUSTOM ORDER - 2 - 4 Week Lead Time On Standard Laminate (No Doors/Drawers/Crown) / 4 - 6 Week Lead Time on UPGRADED Laminate from Final Measurements - NON Returnable / NON Refundable - No cancellations and/or changes once order has been processed. If changes are submitted after the initial approval, lead times may be extended.		0.00	0.00T
Sketches	Note: All drawings are an artistic interpretation of the general appearance of the design. It is not meant to be an exact rendering.		0.00	0.00T
	ST-124 (NY Capital Improvement Exempt)		0.00%	0.00

TOTAL $3,388.88

ACCEPTANCE OF ESTIMATE-The above prices, specifications and conditions are satisfactory and are hereby accepted. You are authorized to do the work as specified. Payment will be made as outlined.
METHOD OF PAYMENT: ( ) Check ( ) Credit Card

DATE:_____ SIGNATURE:_____

By providing credit card information, the 50% deposit charge and final balance charge following installation are authorized. Prepay terms are paid in full.

☐☐☐☐ - ☐☐☐☐ - ☐☐☐☐ - ☐☐☐☐

Exp. Date ____/____ CVV ____

Address credit card bill is mailed to: _____
_____

48 Hour Quick Ship Program (QSP)
Metal Lockers – Color Selection Guide

6 Popular Colors No Added Cost

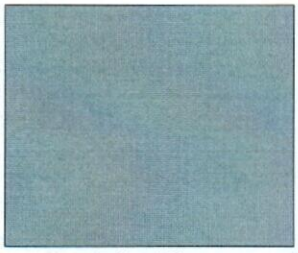
Gray #25

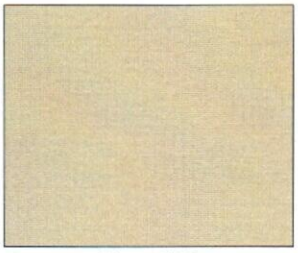
Almond #03

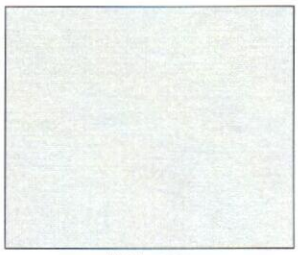
White #29

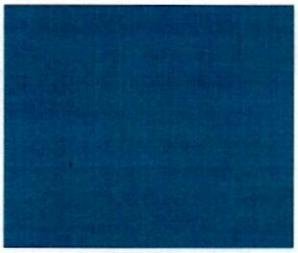
Blue Frost #36

Charcoal #23

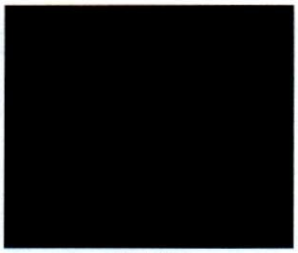
Black #11

Knock Down Lockers — Ship in 48 Hours
Assembled Lockers — Ship in 5 Working Days

Doors and exposed body parts on Traditional and Traditional Plus Metal Lockers shall be selected from ASI Storage Solutions' current QSP offering, shown in the chart on the reverse side. Non-exposed body parts, e.g., shelves, shall be finished in Almond #03. Competitor Lockers shall have the same selected color throughout.

- All QSP orders must be clearly marked Quick Ship or QSP, otherwise normal production queue will dictate ship date.
- The standard lead time for knock down QSP lockers is 2 working days after receipt of order.
- Assembled lockers of 50 frames or less require 5 working days. Add 1 working day for removal of legs.
- Changes and cancellations are not available after placement of a QSP order.
- Shop drawings will not be provided for QSP orders.
- Maximum standard QSP order size is 50 frames. Orders larger than 100 frames will be processed as production orders. Please contact your Locker Champion for inventory availability beyond standard limits.
- ASI Storage Solutions reserves the right to assign warehouse FOB point based on inventory availability.

ASI Storage Solutions
900 Clary Connector
Eastanollee, GA 30538
Tel: 706.827.2720 Fax: 706.827.2710
E-mail: info@asi-storage.com
Web: asi-storage.com

Actual colors may vary slightly from those shown due to limitations in the printing process.

©2019 ASI Storage Solutions, an ASI Group Company

ASI107873119

"In Stock" Sizes & Colors

	Traditional						Traditional Plus		Competitor					
	Almond	Gray	Blue Frost	Charcoal	White	Black	Almond	Gray	Almond	Gray	Blue Frost	White	Charcoal	Black
Sizes (Inches)	03	25	36	23	29	11	03	25	03	25	36	29	23	11
Single Tier														
12x12x66	✓	✓	✓	✓	✓	✓								
12x15x66	✓	✓	✓	✓	✓	✓								
12x18x66	✓	✓	✓	✓	✓	✓								
15x15x66	✓	✓	✓	✓	✓	✓								
15x18x66	✓	✓	✓	✓	✓	✓								
12x12x78	✓	✓	✓	✓	✓	✓	✓	✓	✓	✓	✓	✓	✓	✓
12x15x78	✓	✓	✓	✓	✓	✓	✓	✓	✓	✓	✓	✓	✓	✓
12x18x78	✓	✓	✓	✓	✓	✓	✓	✓	✓	✓	✓	✓	✓	✓
15x15x78	✓	✓	✓	✓	✓	✓								
15x18x78	✓	✓	✓	✓	✓	✓								
18x18x78	✓	✓	✓	✓	✓	✓								
Double Tier														
12x12x66	✓	✓	✓	✓	✓	✓								
12x15x66	✓	✓	✓	✓	✓	✓								
12x18x66	✓	✓	✓	✓	✓	✓								
12x12x78	✓	✓	✓	✓	✓	✓	✓	✓	✓	✓	✓	✓	✓	✓
12x15x78	✓	✓	✓	✓	✓	✓	✓	✓	✓	✓	✓	✓	✓	✓
12x18x78	✓	✓	✓	✓	✓	✓	✓	✓	✓	✓	✓	✓	✓	✓
15x15x78	✓	✓	✓	✓	✓	✓								
15x18x78	✓	✓	✓	✓	✓	✓								
18x18x78	✓	✓	✓	✓	✓	✓								
3 Tier														
12x12x78	✓	✓	✓	✓	✓	✓	✓	✓	✓	✓	✓	✓	✓	✓
12x15x78	✓	✓	✓	✓	✓	✓	✓	✓	✓	✓	✓	✓	✓	✓
12x18x78	✓	✓	✓	✓	✓	✓	✓	✓	✓	✓	✓	✓	✓	✓
4 Tier														
12x12x66	✓	✓												
12x15x66	✓	✓												
12x18x66	✓	✓												
12x12x78	✓	✓	✓	✓	✓	✓								
12x15x78	✓	✓	✓	✓	✓	✓								
12x18x78	✓	✓	✓	✓	✓	✓								
5 Tier														
12x12x66	✓	✓	✓	✓	✓	✓								
12x15x66	✓	✓	✓	✓	✓	✓								
12x18x66	✓	✓	✓	✓	✓	✓								
6 Tier														
12x12x78	✓	✓	✓	✓	✓	✓			✓	✓	✓	✓	✓	✓
12x15x78	✓	✓	✓	✓	✓	✓			✓	✓	✓	✓	✓	✓
12x18x78	✓	✓	✓	✓	✓	✓			✓	✓	✓	✓	✓	✓
4 Wall Mount														
45x18x13	✓	✓				✓								
16 Person														
69x18x78	✓	✓				✓								

NOTE: The 66" and 78" height indicated for lockers above includes 6" legs. If requested, and clearly marked on the order form, ASI Storage Solutions will remove legs - converting a 66" high locker to a 60" high locker, and a 78" high locker to a 72" high locker. Removal of legs may add up to 1 additional working day to our 48 Hour shipping schedule.

BOBRICK

Technical Data

SURFACE-MOUNTED MULTI-ROLL TOILET TISSUE DISPENSER

B-2888

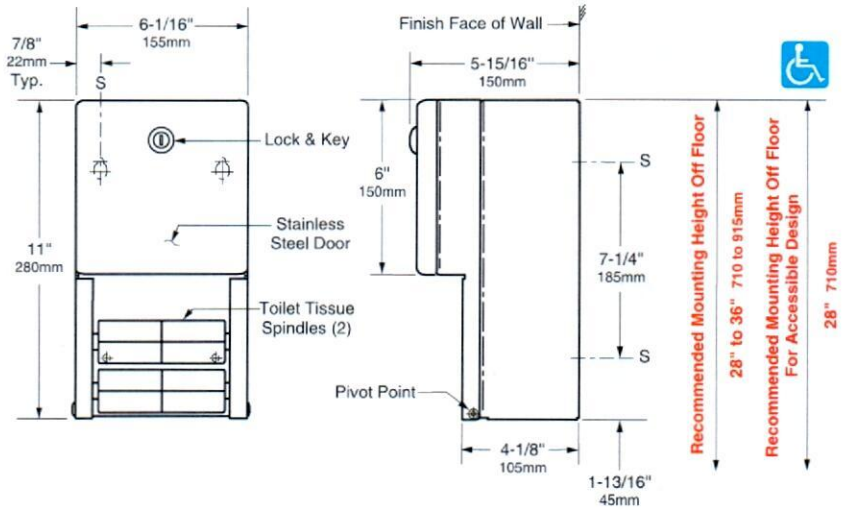

MATERIALS:

Cabinet — 18-8, type-304, 22-gauge (0.8mm) stainless steel. All-welded construction. Exposed surfaces have satin finish.

Door — 18-8, type-304, 22-gauge (0.8mm) stainless steel with 18-gauge (1.2mm) stainless steel door frame. Exposed surfaces have satin finish. Front of door is drawn, one-piece, seamless construction. Secured to cabinet with two rivets. Equipped with a tumbler lock keyed like other Bobrick washroom accessories.

Dispensing Mechanism, Inner Housing and Cam — 18-8, type-304, 18-gauge (1.2mm) stainless steel.

Spindles (2) — Heavy-duty, one-piece, molded ABS. Theft-resistant. Retained in dispensing mechanism when door is locked.

OPERATION:

Unit holds two standard-core toilet tissue rolls up to 5-1/4" (133mm) diameter (1800 sheets). Tissue rolls are loaded and locked into dispensing mechanism. Extra roll automatically drops in place when bottom roll is depleted. Depleted rolls can only be removed after unlocking door.

INSTALLATION:

For partitions with particleboard or other solid core, secure with four #10 x 5/8" (4.8 x 16mm) sheet-metal screws (not furnished) at points indicated by an *S*, or provide through-bolts, nuts, and washers.

For hollow-core metal partitions, provide solid backing into which sheet-metal screws can be secured. If two units are installed back-to-back, then provide threaded sleeves and machine screws for the full thickness of partition.

For plaster or dry wall construction, provide concealed backing to comply with local building codes, then secure unit with sheet-metal screws.

For other wall surfaces, provide fiber plugs or expansion shields for use with sheet-metal screws or provide 3/16" (5mm) toggle bolts or expansion bolts.

SPECIFICATION:

Surface-mounted multi-roll toilet tissue dispenser shall be type-304 stainless steel with all-welded construction, including dispensing mechanism, inner housing and cam; exposed surfaces shall have satin finish. Front of toilet tissue dispenser door shall be drawn, one-piece, seamless construction. Door shall be secured to cabinet with two rivets and equipped with a tumbler lock keyed like other Bobrick washroom accessories. Unit shall dispense two standard-core toilet tissue rolls up to 5-1/4" (133mm) diameter (1800 sheets). Extra roll shall automatically drop in place when bottom roll is depleted. Unit shall be equipped with two theft-resistant, heavy-duty, one-piece, molded ABS spindles.

Surface-Mounted Multi-Roll Toilet Tissue Dispenser shall be Model B-2888 of Bobrick Washroom Equipment, Inc., Clifton Park, New York; Jackson, Tennessee; Los Angeles, California; Bobrick Washroom Equipment Company, Scarborough, Ontario; Bobrick Washroom Equipment Pty. Ltd., Australia; and Bobrick Washroom Equipment Limited, United Kingdom.

The illustrations and descriptions herein are applicable to production as of the date of this Technical Data Sheet.
The manufacturer reserves the right to, and does from time to time, make changes and improvements in designs and dimensions.

Revised 4/27/11 Printed in U.S.A.
© 2011 by Bobrick Washroom Equipment, Inc.

BOBRICK

Technical Data

TILT MIRROR WITH STAINLESS STEEL FRAME

B-293 SERIES

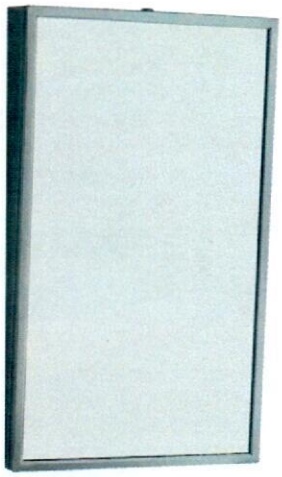

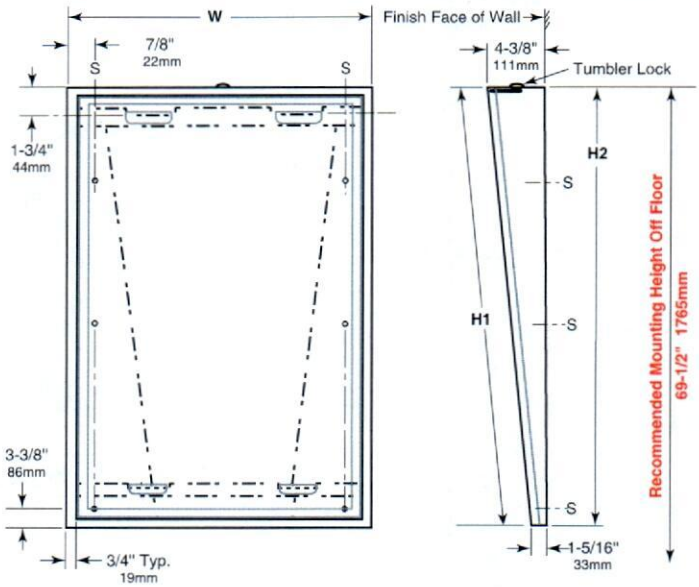

STANDARD STOCK SIZES

MODEL NO.	MIRROR SIZE		OVERALL SIZE	
	W	H1	W	H2
B-293 1830	18" (46cm)	30" (76cm)	18" (46cm)	30-3/16" (77cm)
B-293 1836	18" (46cm)	36" (91cm)	18" (46cm)	36-3/16" (92cm)
B-293 2436	24" (61cm)	36" (91cm)	24" (61cm)	36-3/16" (92cm)

Other sizes up to 40" x 40" (101 x 122cm) or 48" x 36" (122 x 91cm) are available on special order; minimum size available, 16" x 24" (41 x 61cm).
Design not as shown

MATERIALS:

Mirror Frame — 18-8, type 304, heavy-gauge stainless steel, 3/4" x 3/4" (19 x 19mm) angle with vertical-grain satin finish. One piece, roll-formed construction forms continuous integral stiffener on all sides. Bevel design on front of angle holds frame tightly against mirror. Corners of mirror frame are heliarc welded, ground and polish smooth. Galvanized steel back is fastened to frame with concealed screws and equipped with integral horizontal hanging brackets near the top and bottom of the mirror for hanging the mirror and to prevent the mirror from pulling away from the wall frame.

Wall Frame — 18-8, type 304, heavy-gauge stainless steel with satin finish. Tapers from 4-3/8" (111mm) depth at top to 1-5/16" (33mm) depth at bottom. Wall Frame furnished with tumbler lock to secure mirror to wall frame.
Designer's Note: Type 304 stainless steel provides superior corrosion resistance, compared to 400 Series stainless steel, against environmental moisture, hose-down maintenance and strong cleaning solutions.

Mirror — No. 1 quality, 1/4" (6mm) select float glass, selected for silvering; electrolytically copper-plated by the galvanic process, guaranteed for 15 years against silver spoilage. All edges are polished and protected by plastic filler strips; back is protected by full-size, shock-absorbing, water-resistant, nonabrasive, 1/8" (3mm) thick polystyrene padding.

OPERATION:

Mirror is designed to provide full visibility for wheelchair patients in hospitals and nursing homes.

INSTALLATION:

For complete installation instructions please follow 293-69 installation instruction sheet.

SPECIFICATION:

Tilt mirror assembly shall consist of a mirror and a separate wall frame with built-in wall hanger. Wall frame furnished with tumbler lock for securing mirror to wall frame. Tilt mirror frame shall be type 304 stainless steel with beveled front to hold frame tightly against mirror; corners shall be welded, ground, and polished smooth. Wall frame shall be type 304 stainless steel designed with horizontal locking bars to secure mirror to wall frame. All exposed surfaces shall have satin finish with vertical grain. Select float glass mirror shall be guaranteed for 15 years against silver spoilage. All edges shall be protected by plastic filler strips. Back shall be protected by full-size, shock-absorbing, water-resistant, nonabrasive, 1/8" (3mm) thick polystyrene padding.

Tilt Mirror shall be Model B-293 _____ (insert width and height) of Bobrick Washroom Equipment, Inc., Clifton Park, New York; Jackson, Tennessee; Los Angeles, California; Bobrick Washroom Equipment Company, Scarborough, Ontario; Bobrick Washroom Equipment Pty. Ltd., Australia; and Bobrick Washroom Equipment Limited, United Kingdom.

The illustrations and descriptions herein are applicable to production as of the date of this Technical Data Sheet.
The manufacturer reserves the right to, and does from time to time, make changes and improvements in designs and dimensions.

Revised 11/16/16 Printed in U.S.A.
© 2016 by Bobrick Washroom Equipment, Inc.

BOBRICK

Technical Data

CLOTHES HOOK WITH BUMPER

B-212

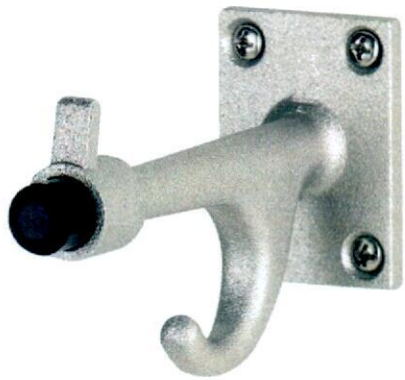

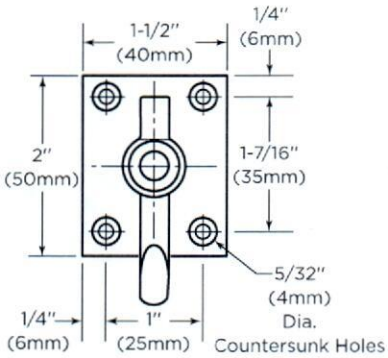

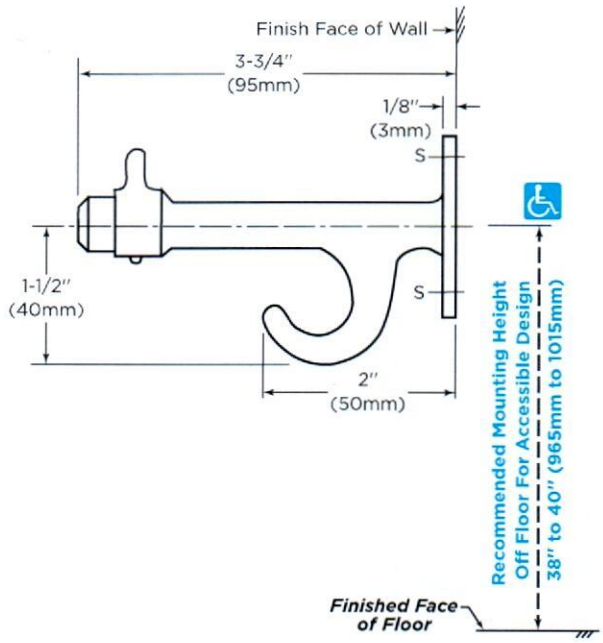

MATERIALS:

Hook and Base — Solid cast aluminum.
Bumper — Hard rubber secured with drive-screw. Protects wall or partition surfaces.

INSTALLATION:

Mount unit on wall with four screws, furnished by manufacturer, at points indicated by an *S*. For plaster or dry wall construction, provide concealed backing to comply with local building codes, then secure hook with screws furnished. For other wall surfaces, provide fiber plugs or expansion shields for use with screws furnished, or provide 1/8" (3mm) toggle bolts or expansion bolts.

SPECIFICATION:

Clothes hook shall be constructed of solid cast aluminum. Unit shall be equipped with hard rubber bumper.

Clothes Hook With Bumper shall be Model B-212 of Bobrick Washroom Equipment, Inc., Clifton Park, New York; Jackson, Tennessee; Los Angeles, California; Bobrick Washroom Equipment Company, Scarborough, Ontario; Bobrick Washroom Equipment Pty. Ltd., Australia; and Bobrick Washroom Limited, United Kingdom.

The illustrations and descriptions herein are applicable to production as of the date of this Technical Data Sheet.
The manufacturer reserves the right to, and does from time to time, make changes and improvements in designs and dimensions.

Revised 9/29/23
© 2023 by Bobrick Washroom Equipment, Inc.

BOBRICK

Technical Data

1½" (38mm) DIAMETER STAINLESS STEEL GRAB BARS WITH SNAP FLANGE

B-6806 SERIES

Specify Finish Required: ☐ Satin-finish, slip-resistant surface
☐ Peened surface; add suffix .99 to model number

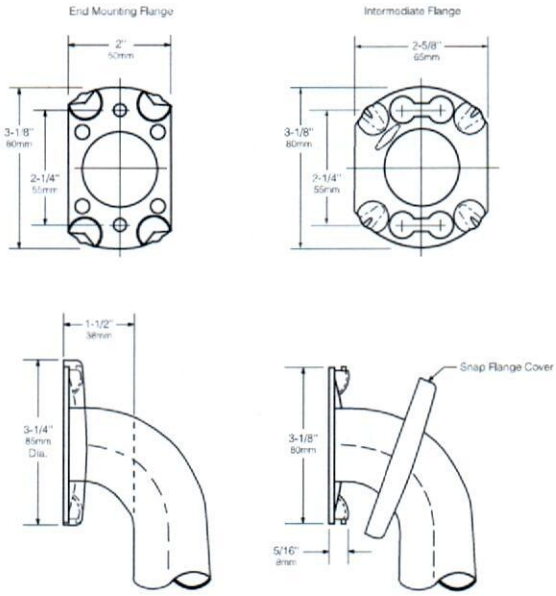

HORIZONTAL

VERTICAL

B-6806 x 12, 18, 24, 30, 36, 42, 48

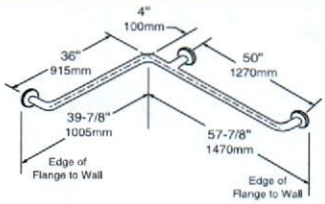

TWO-WALL WHEELCHAIR COMPARTMENT

B-68137

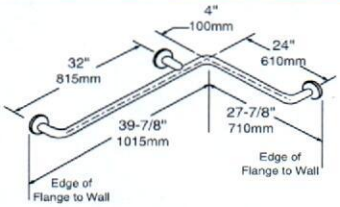

HORIZONTAL TUB / SHOWER COMPARTMENT BAR 24 x 36

B-68616

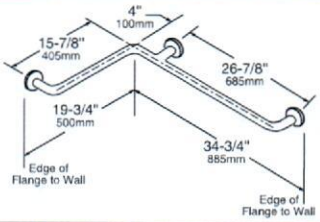

HORIZONTAL TWO-WALL BAR for Shower Stall

B-6861

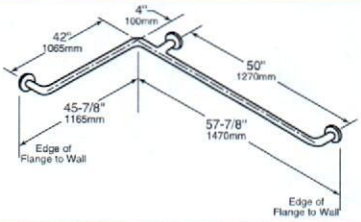

TWO-WALL TOILET COMPARTMENT BAR 42 x 54

B-6897

continued . . .

The illustrations and descriptions herein are applicable to production as of the date of this Technical Data Sheet.
The manufacturer reserves the right to, and does from time to time, make changes and improvements in designs and dimensions.

Revised 11/11/19 5/8
© 2019 by Bobrick Washroom Equipment, Inc.

MATERIALS:

Grab Bar — 18-8 S, type-304, 18-gauge (1.2mm) stainless steel tubing with satin-finish, slip-resistant surface. 1-1/2" (38mm) outside diameter. Ends are heliarc welded to flanges. Clearance between the grab bar and wall is 1-1/2" (38mm).

Concealed Mounting Flanges — 18-8 S, type-304, 11-gauge (3.2mm) thick, stainless steel plate; end flanges 2" x 3-1/8" (50 x 80mm) with holes for attachment to wall. Intermediate flanges 2-5/8" x 3-1/8" (65 x 80mm) wide x 3-1/8" (80mm) diameter.

Snap Flange Covers — 18-8 S, type-304, 22-gauge (0.8mm) drawn stainless steel with satin-finish. 3-1/4" (85mm) diameter x 1/2" (13mm) deep. Each cover snaps over mounting flange to conceal mounting screws.

STRENGTH:

Bobrick grab bars that provide 1-1/2" (38mm) clearance from wall can support loads in excess of 900 pounds (408kg) if properly installed. Other grab bar configurations can support loads in excess of 250 pounds (113kg) if properly installed, complying with accessible design (including ADAAG in the U.S.A.) for structural strength

Safety Warning: Grab bars are no stronger than the anchors and walls to which they are attached and, therefore, must be firmly secured in order to support the loads for which they are intended. To avoid potential injury, the building owner or maintenance personnel should remove the grab bar from service if the grab bar is not adequately secured to wall or if there is any observed damage to the welds.

INSTALLATION:

Provide concealed anchor device or backing as specified or required in accordance with local building codes before wall is finished. Fasten concealed mounting flanges to anchor device or backing with at least two screws opposing each other in each flange. Snap flange covers over each mounting flange to conceal mounting screws. Concealed anchor devices and mounting screws are not included with Bobrick grab bars and must be specified as an accessory.

For Grab Bars with an Intermediate Flange(s), Pull Snap-Flange Covers away from mounting flanges. Place grab bar in desired mounting location. Use intermediate flange as a template to mark location of mounting screws at intermediate flange only. Mark screw locations at the center of the slot in the middle of the double-keyhole shaped mounting holes (2) in the intermediate flange. Remove grab bar from wall. Drive the intermediate flange mounting screws into wall at marked locations. **Note:** Make sure to leave a space of just over 1/8" (3.17mm) between the underside of the screw head and the wall. Install grab bar on the wall by placing the round ends of the intermediate flange double-keyhole shaped mounting holes over the mounting screws (2) are located in the middle of the flange slots. Install the mounting screws into the wall at the end flanges and secure tightly. Tighten the mounting screws at the intermediate flange. Press all snap-flange covers into place to conceal mounting flanges.

Note: Recommend use of 1/4" or #14 sheet metal or wood screws to install Intermediate Flange. #12 screws may also be used.

Important Notes:

1. **Mounting Kits** — Bobrick offers a mounting kit for installing grab bars; **one Bobrick mounting kit is required for each flange.**

Mounting Kit No.	Description
252-30	Consists of # (3) 14 x 2½" type-304 stainless steel, Phillips round-head, sheet-metal screws.

2. **Grab Bar Fastener** — Bobrick offers a grab bar fastening system that secures all Bobrick grab bar series; **one Bobrick fastener is required for each flange.** Install grab bar without backing in wall requires minimum 5/8" (16mm) thick painted or tiled drywall.

WingIt™ Fastener No.	Description
251-4	Consists of 10-32 x 5/16" round-head, Phillips 18/8 stainless steel screws. (1) WingIt grab bar fastener.

3. **Optional Anchor Device** — Bobrick grab bar anchor device includes stainless steel machine screws to be used for attaching grab bars to anchors; **one Bobrick concealed anchor device is required for each flange.**

Optional Anchor No.	Description
2583	Anchor for 3/4" to 1" (19-25mm) panel 1 anchor required for each flange.
2586	Anchor for 1/2" to 1" (13mm) panel 1 anchor required for each flange.

SPECIFICATION:

Grab bar shall be type-304 stainless steel with satin-finish, slip-resistant surface. Grab bar shall have 18-gauge (1.2mm) wall thickness and 1-1/2" (38mm) outside diameter. Clearance between the grab bar and wall shall be 1-1/2" (38mm). Concealed mounting flanges shall be 11-gauge (3.2mm) thick stainless steel plate, 2" x 3-1/8" (50 x 80mm), and equipped with at least two screw holes for attachment to wall. Flange covers shall be 22 gauge (0.8mm), 3-1/4" (85mm) diameter x 1/2" (13mm) deep, and shall snap over mounting flange to conceal mounting screws and/or WingIt fasteners. Ends of grab bar shall pass through concealed mounting flanges and be heliarc welded to form one structural unit. Grab bar shall comply with accessible design (including ADAAG in the U.S.A.) for structural strength.

Grab Bar shall be Model _____ (insert model number) of Bobrick Washroom Equipment, Inc., Clifton Park, New York; Jackson, Tennessee; Los Angeles, California; Bobrick Washroom Equipment Company, Scarborough, Ontario; Bobrick Washroom Equipment Pty. Ltd., Australia; and Bobrick Washroom Equipment Limited, United Kingdom.

The illustrations and descriptions herein are applicable to production as of the date of this Technical Data Sheet.
The manufacturer reserves the right to, and does from time to time, make changes and improvements in designs and dimensions.

© 2019 by Bobrick Washroom Equipment, Inc.

BOBRICK

Technical Data

ClassicSeries® SURFACE-MOUNTED SOAP DISPENSER

B-2111

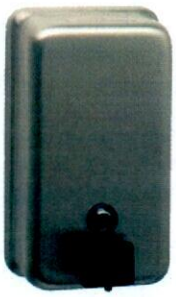

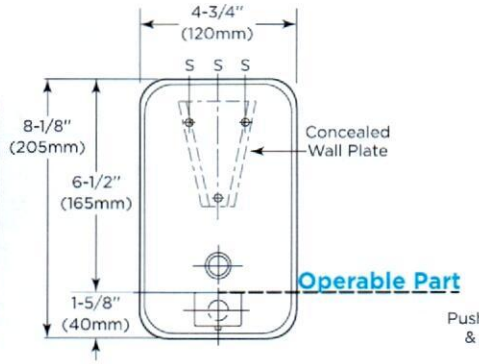

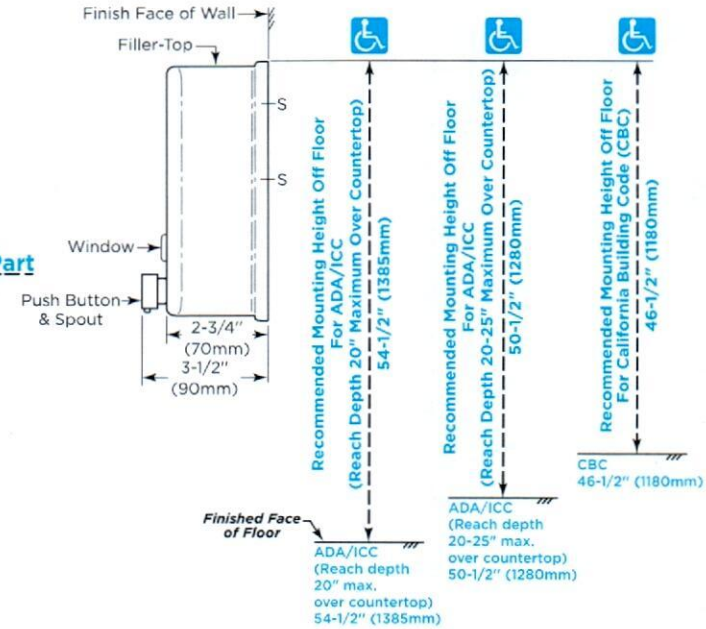

Installation Guidance

***Operable Part:** Top of pushbutton

Maximum mounting height of operable part:

ADA/ICC (Reach Depth 20" Maximum Over Countertop): 48" above finished floor (AFF)

ADA/ICC (Reach Depth, 20"-25" Maximum Over Countertop): 44" above finished floor (AFF)

CBC: 40" above finished floor (AFF)

*For more information regarding operable parts, please refer to Bobrick Planning Guide for Accessible Restrooms, page 9.

MATERIALS:

Container — 18-8, Type-304, 22-gauge (0.8mm) stainless steel with satin-finish. Body is drawn, one-piece, seamless construction. Back plate has mounting bracket attached. Furnished with concealed wall plate. Equipped with a clear acrylic refill-indicator window and a locked, hinged stainless steel lid for top filling. Capacity: 40-fl oz (1.2-L).

Valve — Black molded plastic push button and spout. Soap head-holding mushroom valve. Stainless steel spring. U-packing seal and duckbill. Antibacterial-soap-resistant plastic cylinder.

continued . . .

The illustrations and descriptions herein are applicable to production as of the date of this Technical Data Sheet.
The manufacturer reserves the right to, and does from time to time, make changes and improvements in designs and dimensions.

Revised 5/7/25
© 2025 by Bobrick Washroom Equipment, Inc.

OPERATION:

Corrosion-resistant valve dispenses commercially marketed all-purpose hand soaps. To prevent corrosion of the tank, use only chloride-free pH-neutral liquid soaps. Valve is operable with one hand, without tight grasping, pinching, or twisting of the wrist, and with less than 5 pounds of force (22.2 N) to comply with accessible design guidelines (including ADAAG in the U.S.A.). Window indicates when refill is required. The locked, hinged lid opens for top filling only with special key provided. Concealed, vandal-resistant mounting.

INSTALLATION:

Secure wall plate to the wall with three sheet-metal screws, furnished by manufacturer, at points indicated by an *S*. Slide mounting bracket of container down onto wall plate and secure unit with furnished locking-screw. For plaster or dry wall construction, provide concealed backing to comply with local building codes and secure with sheet-metal screws furnished. For other wall surfaces, provide fiber plugs or expansion shields for use with sheet-metal screws furnished, or provide 1/8" (3mm) toggle bolts or expansion bolts.

Note: Surface-mount the dispenser plumb and true with valve 6" (150mm) to right or left of lavatory center. Provide 4" (100mm) minimum clearance from the lid to the underside of any horizontal projection. Push buttons should be located 44" (1120mm) maximum above the finish floor.

SPECIFICATION:

Surface-mounted soap dispenser shall be Type-304 stainless steel with satin-finish. Corrosion-resistant valve shall dispense commercially marketed all-purpose hand soaps, non-iodine based soaps and do not use alcohol based sanitizers. To prevent corrosion of the tank, use only chloride-free pH-neutral liquid soaps. Valve shall be operable with one hand and with less than 5 pounds of force (22.2 N) to comply with accessible design guidelines (including ADAAG in the U.S.A.). Container shall be equipped with a clear acrylic refill-indicator window; a locked, hinged stainless steel lid for top filling; and shall have a capacity of 40-fl oz (1.2-L). Unit shall have concealed, vandal-resistant mounting.

Surface-Mounted Soap Dispenser shall be Model B-2111 of Bobrick Washroom Equipment, Inc., Clifton Park, New York; Jackson, Tennessee; Los Angeles, California; Bobrick Washroom Equipment Company, Scarborough, Ontario; Bobrick Washroom Equipment Pty. Ltd., Australia; and Bobrick Washroom Equipment Limited, United Kingdom.

The illustrations and descriptions herein are applicable to production as of the date of this Technical Data Sheet.
The manufacturer reserves the right to, and does from time to time, make changes and improvements in designs and dimensions.

© 2025 by Bobrick Washroom Equipment, Inc.

BOBRICK

Technische Daten

ClassicSeries® AUFPUTZMONTAGE SEIFENSPENDER

B-2111

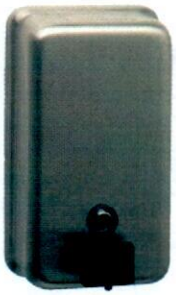

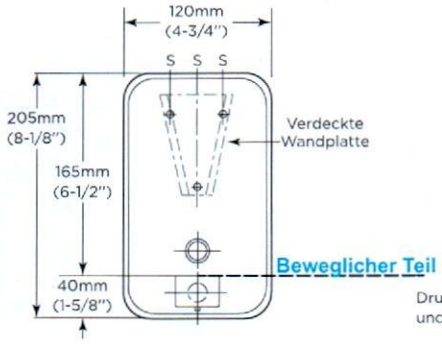

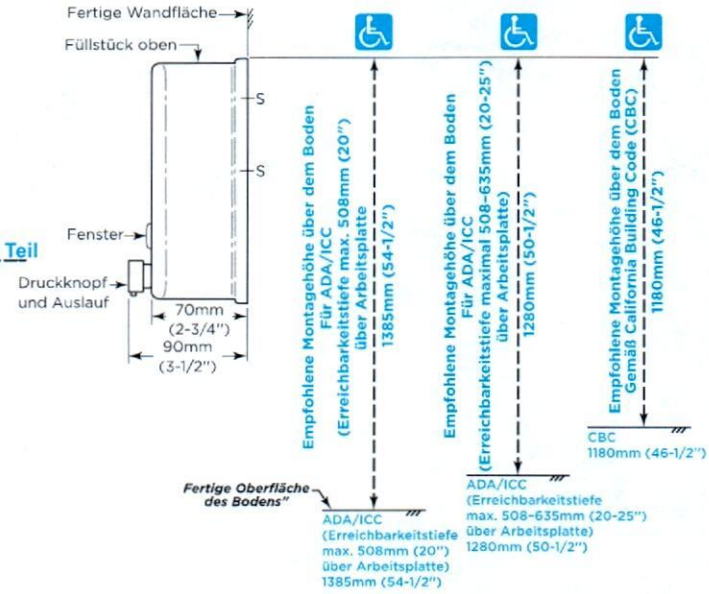

Installationsanleitung

Beweglicher Teil: Oberseite des druckknopf

Maximale Montagehöhe des beweglichen Teils:

ADA/ICC (Reichweite maximal 20" über der Arbeitsplatte): 48" über dem fertigen Boden (OKFF)

ADA/ICC (Reichweite, 20–25" maximal über der Arbeitsplatte): 44" über dem fertigen Boden (OKFF)

CBC: 40" über dem fertigen Boden (OKFF)

*Weitere Informationen zu beweglichen Teilen finden Sie im Bobrick-Planungshandbuch für barrierefreie Toiletten, Seite 9.

MATERIALIEN:

Behälter — 18-8, Typ 304, 22 Maßstab (0,8 mm) Edelstahl mit Satin-Finish. Der Körper ist gezogen, einteilig und nahtlos konstruiert. An der Rückplatte ist eine Montagehalterung angebracht. Ausgestattet mit verdeckter Wandplatte. Ausgestattet mit einem durchsichtigen Nachfüllanzeigefenster aus Acryl und einem verriegelbaren Edelstahldeckel mit Scharnier zum Befüllen von oben. Kapazität: 1,2 l (40 fl oz).

Ventil - Druckknopf und Ventil aus schwarzem geformtem Kunststoff. Pilzventil mit Seifenkopfhalterung. Feder aus Edelstahl. U-Dichtung und Auslauf. Antibakteriell-seifenbeständiger Kunststoffzylinder.

Fortsetzung folgt . . .

Die Abbildungen und Beschreibungen in diesem Dokument gelten für die Produktion zum Zeitpunkt der Veröffentlichung dieses technischen Datenblatts. Der Hersteller behält sich das Recht vor, von Zeit zu Zeit Änderungen und Verbesserungen an Design und Abmessungen vorzunehmen und tut dies auch.

Überarbeitet am 7/5/25

©2025 von Bobrick Washroom Equipment, Inc.

BETRIEB:

Korrosionsbeständiges Ventil zur Abgabe handelsüblicher Allzweck-Handseifen. Um Korrosion des Tanks zu vermeiden, verwenden Sie nur chloridfreie, pH-neutrale Flüssigseifen. Das Ventil kann mit einer Hand bedient werden, ohne dass man es fest greifen, einklemmen oder das Handgelenk verdrehen muss, und mit einem Kraftaufwand von weniger als 5 Pfund (22,2 N), um den Richtlinien für barrierefreies Design (einschließlich ADAAG in den USA) zu entsprechen. Ein Fenster zeigt an, wann eine Nachfüllung erforderlich ist. Der verschlossene Klappdeckel lässt sich zum Befüllen von oben nur mit dem mitgelieferten Spezialschlüssel öffnen. Verdeckte, vandalismusgeschützte Montage.

INSTALLATION:

Befestigen Sie die Wandplatte mit drei Blechschrauben (vom Hersteller mitgeliefert) an den durch ein Symbol gekennzeichneten Punkten an der Wand. *S* . Schieben Sie die Montagehalterung des Behälters nach unten auf die Wandplatte und befestigen Sie die Einheit mit der mitgelieferten Feststellschraube. Sorgen Sie bei Gips- oder Trockenbauwänden für eine verdeckte Rückseite, um den örtlichen Bauvorschriften zu entsprechen. Für andere Wandoberflächen stellen Sie Faserdübel oder Spreizdübel zur Verwendung mit den mitgelieferten Blechschrauben bereit oder stellen Sie Kippdübel oder Spreizdübel mit einem Durchmesser von 3 mm (1/8") bereit.

Hinweis: Montieren Sie den Spender lotrecht und waagerecht auf der Oberfläche, mit dem Ventil 150mm (6") rechts oder links von der Mitte des Waschraums. Sorgen Sie für einen Mindestabstand von 100mm (4") zwischen dem Deckel und der Unterseite aller horizontalen Vorsprünge. Druckknöpfe sollten sich maximal 1120mm (44") über dem fertigen Boden befinden.

SPEZIFIKATION:

Der auf der Oberfläche montierte Seifenspender besteht aus Edelstahl Typ 304 und hat eine matt gebürstete Oberfläche. Das korrosionsbeständige Ventil ist für die Abgabe handelsüblicher Allzweck-Handseifen und Seifen ohne Jod geeignet. Verwenden Sie keine Desinfektionsmittel auf Alkoholbasis. Um Korrosion des Tanks zu vermeiden, verwenden Sie nur chloridfreie, pH-neutrale Flüssigseifen. Das Ventil ist mit einer Hand und mit weniger als 5 Pfund Kraft (22,2 N) bedienbar und entspricht den Richtlinien für barrierfreies Design (einschließlich ADAAG in den USA). Der Behälter ist mit einem durchsichtigen Nachfüllanzeigefenster aus Acryl und einem verschließbaren Edelstahldeckel mit Scharnier zum Befüllen von oben ausgestattet und hat ein Fassungsvermögen von 1.2 l (40 fl oz). Der Spender verfügt über eine verdeckte, vandalismusgeschützte Montage.

Der Aufputz-Seifenspender ist das Modell B-2111 von Bobrick Washroom Equipment, Inc., Clifton Park, New York; Jackson, Tennessee; Los Angeles, Kalifornien; Bobrick Washroom Equipment Company, Scarborough, Ontario; Bobrick Washroom Equipment Pty. Ltd., Australien; und Bobrick Washroom Equipment Limited, Vereinigtes Königreich sein.

Die Abbildungen und Beschreibungen in diesem Dokument gelten für die Produktion zum Zeitpunkt der Veröffentlichung dieses technischen Datenblatts. Der Hersteller behält sich das Recht vor, von Zeit zu Zeit Änderungen und Verbesserungen an Design und Abmessungen vorzunehmen und tut dies auch.

©2025 von Bobrick Washroom Equipment, Inc.